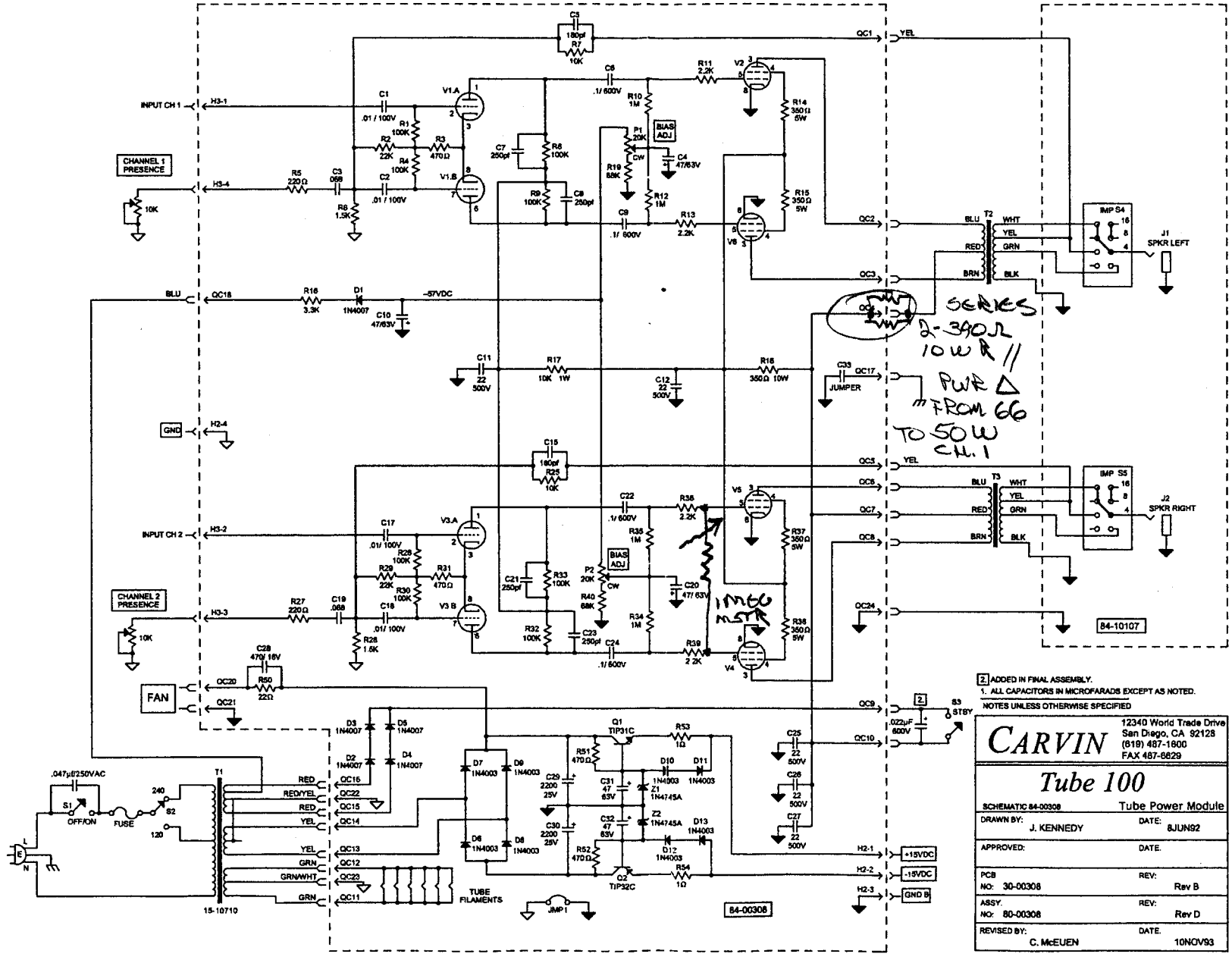

2 ADDED IN FINAL ASSEMBLY.
1. ALL CAPACITORS IN MICROFARADS EXCEPT AS NOTED.
NOTES UNLESS OTHERWISE SPECIFIED

CARVIN
12340 World Trade Drive
San Diego, CA 92128
(619) 487-1600
FAX 487-6629

Tube 100

SCHEMATIC 84-00308 — Tube Power Module

DRAWN BY: J. KENNEDY	DATE: 8JUN92
APPROVED:	DATE.
PCB NO: 30-00308	REV: Rev B
ASSY. NO: 80-00308	REV: Rev D
REVISED BY: C. McEUEN	DATE. 10NOV93

plate voltage = 470V